BOBRICK

Technical Data

SURFACE-MOUNTED THREE ROLL TOILET TISSUE DISPENSER

B-27313

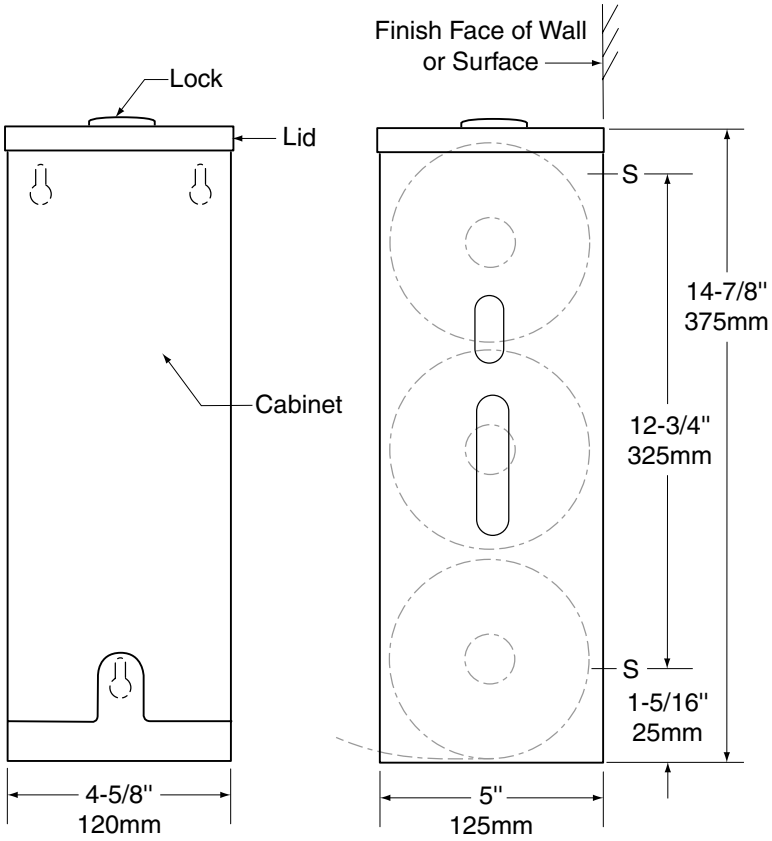

MATERIALS:

Cabinet — 18-8 S, type-304, 22-gauge (0.8mm) stainless steel. All welded construction. Exposed surfaces have satin finish.

Lid — 18-8 S, type-304, 22-gauge (0.8mm) stainless steel. Exposed surfaces have satin finish. Lid secured to cabinet with hinge and equipped with a tumbler lock keyed like other Bobrick washroom accessories.

OPERATION:

Unit holds 3 standard-core toilet tissue rolls up to 4-1/2" (120mm) maximum diameter. Tissue rolls are loaded into the cabinet through the top. Extra roll shall be manually dropped in place when bottom roll is depleted.

INSTALLATION:

Mount unit on partition with three #10 x 5/8" (M4.8x 16mm) sheet-metal screws (not furnished) at points indicated by an *S*. For plaster or dry wall construction, provide concealed backing to comply with local building codes, then secure unit with sheet-metal screws. For other wall surfaces, provide fiber plugs or expansion shields for use with sheet-metal screws or provide 3/16" (5mm) toggle bolts or expansion bolts.

SPECIFICATION:

Surface-mounted three roll toilet tissue dispenser shall be type-304 stainless steel all-welded construction; exposed surfaces shall have satin finish. Lid shall be secured to cabinet with a hinge and equipped with a tumbler lock keyed like other Bobrick washroom accessories. Unit shall dispense three standerd-core toilet tissue rolls up to 4-1/2" (125mm). Extra roll shall be manually dropped in place when bottom roll is depleted.

Surface-Mounted Three Roll Toilet Tissue Dispenser shall be Model B-27313 of Bobrick Washroom Equipment, Inc., Clifton Park, New York; Jackson, Tennessee; Los Angeles, California; Bobrick Washroom Equipment Company, Scarborough, Ontario; Bobrick Washroom Equipment Pty. Ltd., Australia; and Bobrick Washroom Equipment Limited, United Kingdom.

The illustrations and descriptions herein are applicable to production as of the date of this Technical Data Sheet.
The manufacturer reserves the right to, and does from time to time, make changes and improvements in designs and dimensions.

B-27313 Rev. 6/07 Printed in U.S.A.
© 2007 by Bobrick Washroom Equipment, Inc.