LigoWave

# LigoPTP 5-N/ 5-23 RapidFire

Outdoor Wireless Point-to-Point Bridge

COPYRIGHT ©2021 LIGOWAVE

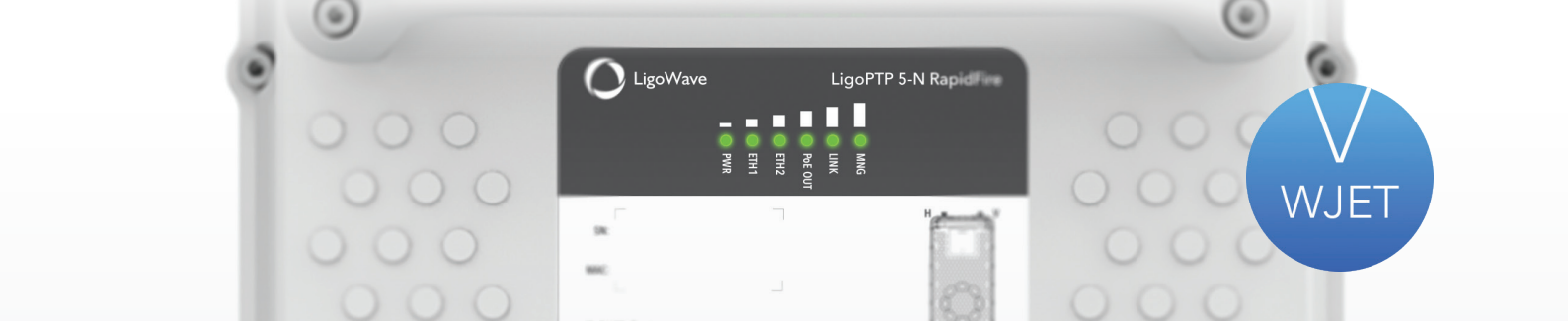


## Outstanding Capacity

RapidFire delivers an extremely high 700Mbps throughput via its unique and powerful RF design that supports up to 256-QAM modulation and 31dBi output power. Our proprietary W-Jet V protocol, specifically engineered for high performing PTP scenarios, minimizes interferences even across long distances and stabilizes latency within 2-4 ms.

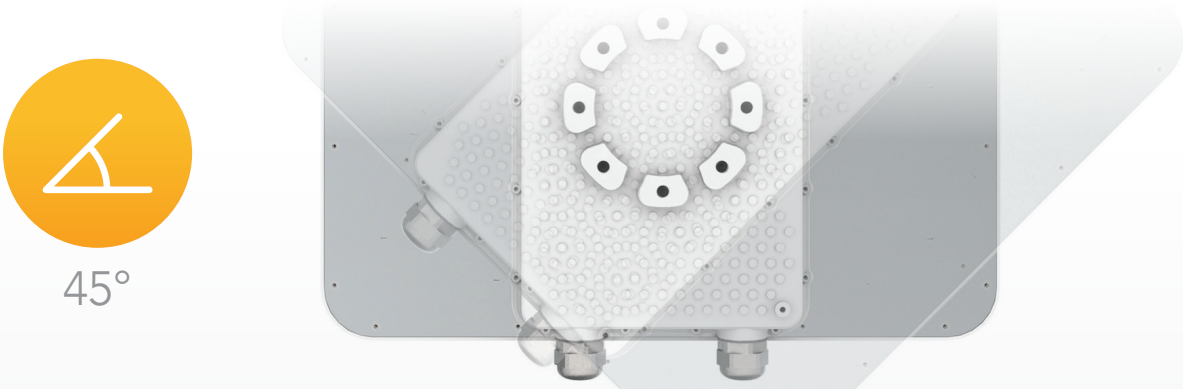


## Professional Design

In addition to achieving maximum performance, LigoWave focuses on delivering flexibility and ease-of-use in our RapidFire series. The robust mounting bracket enables rapid deployment of the links and ensures survivability during high wind-load. The integrated antenna possesses a 45° rotation option which increases installation flexibility; especially advantageous in noisy spectrum areas. A GORE© membrane vent allows fast pressure equalization of the IP-67 rated cast aluminum enclosure to prevent condensation and to ensure seal performance . A detachable handle eases transporting the devices up towers and over rough terrains. Newly designed RGB LEDs indicate different device statuses and signal levels (in 1dBm steps) when aligning the antenna.

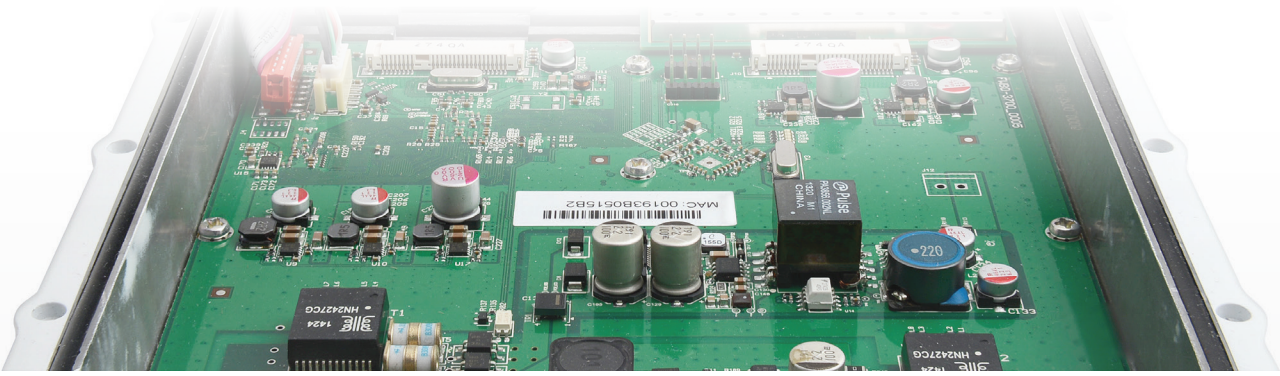

## Powerful All-in-One Hardware Platform

LigoWave RapidFire delivers powerful performance with its new 1.2GHz CPU dedicated for data processing and high (200,000) packet per second delivery. Equipped with two Gigabit Ethernet ports, one with PoE passthrough, the unit is ideal for high-security video surveillance scenarios. RapidFire incorporates integrated surge and ESD protection according to IEC standards and passes Class 4 requirements.

COPYRIGHT ©2021 LIGOWAVE

## Wireless Configuration Interface

An internal 2.4GHz radio allows access into the Rapidfire GUI by wireless connection with any WIFI equipped device. This feature expedites the installation of links and alleviates the problem of troubleshooting in difficult-to-reach locations. Tests prove accessibility even when mounted on top of a 10-story building while standing 20 meters (65 ft) away!

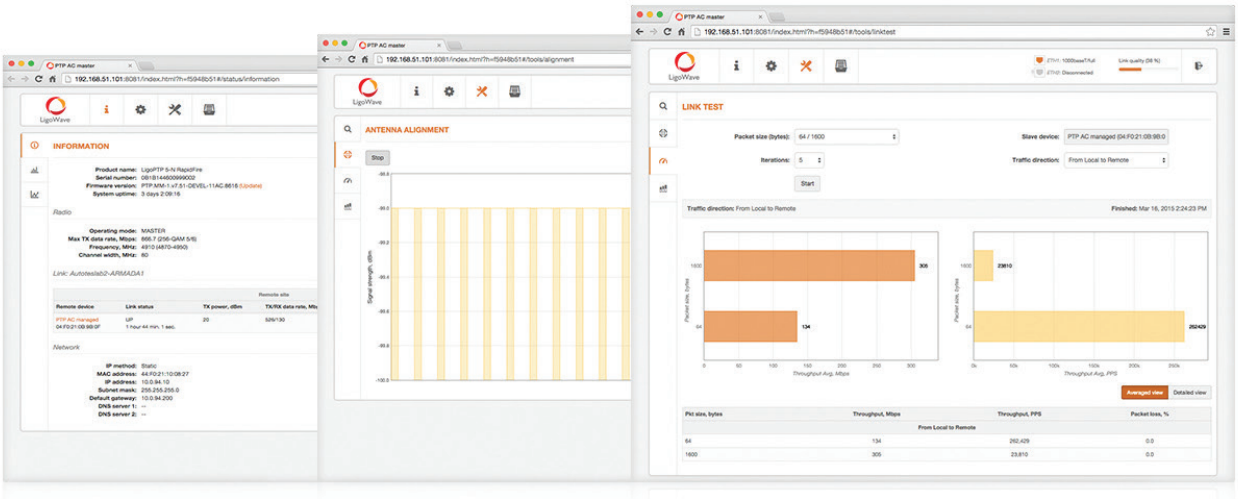


## Powerful OS

The LigoPTP operating system ensures easy and rapid deployment of point-to-point links with stable, fast performance. An intuitive and responsive user interface adjusts the layout based on the size of your screen. Essential tools including Setup Wizard, link test, antenna alignment, spectrum analyzer, and site survey are included to make set-up and troubleshooting more efficient. Automatic mechanisms such as auto-channel and automatic transmit power control optimize the link for maximum performance even in areas with high interference.

COPYRIGHT ©2021 LIGOWAVE

## Setup Wizard

A link setup wizard guides the installer through the important steps of the set-up process.

## Spectrum Analyzer

The integrated spectrum analyzer demonstrates the noise floor in order to find the optimum frequency.

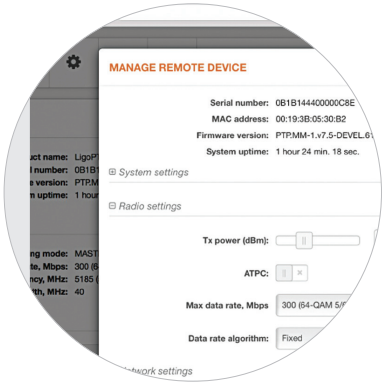


## Single Side Configuration

LigoPTP RapidFire simplifies link configuration by supporting single side configuration as parameters are automatically applied to slave units once set on the master side.

# Easy Pre-Configuration

Multiple options to pre-configure LigoPTP RapidFire devices are displayed in a scheme below. Devices can be connected with each other using wired or wireless connectivity. End-user device can also connect to the master device using 2.4GHz access radio or using wire to the Ethernet port of the master device. LigoPTP RapidFire devices can be discovered using bonjour and SSDP protocols as well.

## Wireless

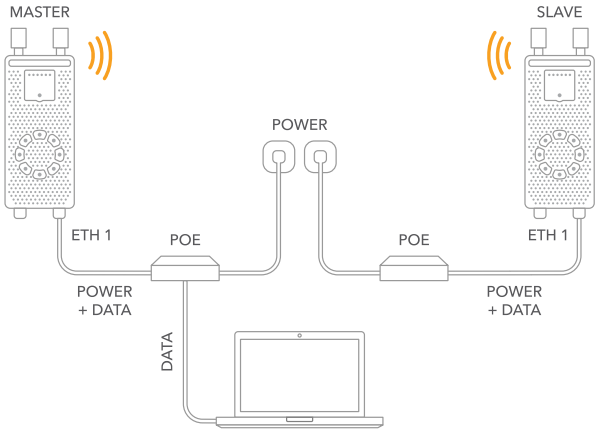


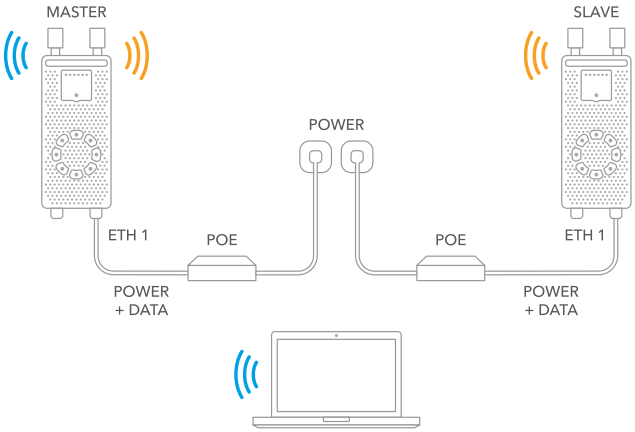


## Wired

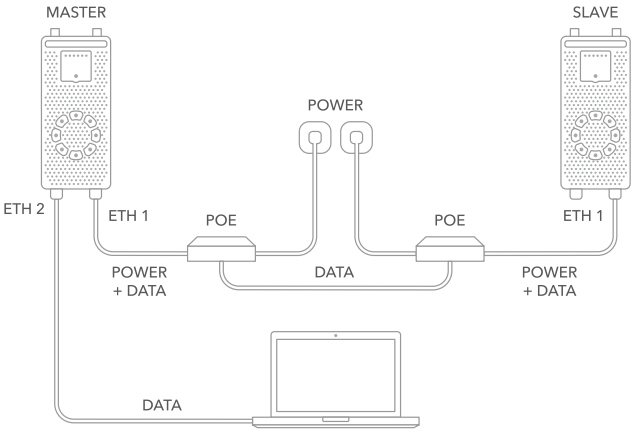


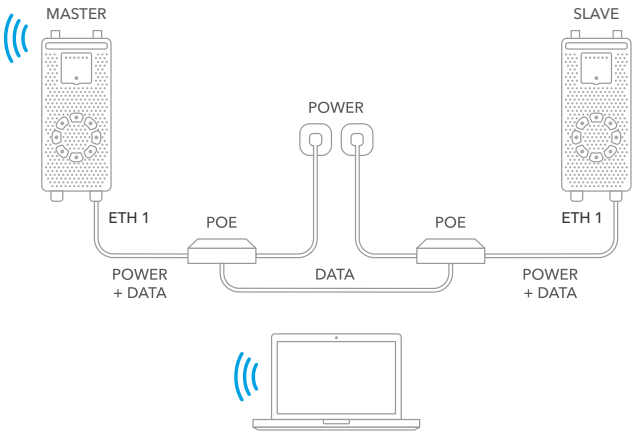


COPYRIGHT ©2021 LIGOWAVE

# 802.3af/at Inserter

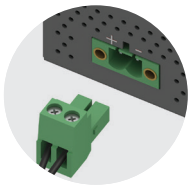

DC input connector

Grounding pin

DIN rail mounting

**Electrical specifications**

| | |
|---|---|
| DC input voltage range | 44.0–57.0V |
| IEEE 802.3af/at compliant | POE output |
| Output power | up to 28W |
| Power output | RJ45 pins 1,2,4,5 (+) and 3,6,7,8 (-) |
| Data rate | 10/100/1000Mbps |
| Surge protection | 2kV line to line,<br>6kV line to ground (output port) |

**Physical specifications**

| | |
|---|---|
| DC input | |
| Data input jack | RJ45 |
| Data + Power output jack | RJ45 |
| Dimensions | 117×87×34mm |
| Weight | 270g |
| Operating temperature | –40 to +65C |
| UTP/FTP cable length | 100m total<br>(from switch to the device) |

COPYRIGHT ©2021 LIGOWAVE

## Radio

| | |
|---|---|
| Wireless protocol | W-Jet V |
| Radio mode | MIMO 2×2 |
| Frequency range | 4.900 - 6.100GHz (FCC: 4.940 - 4.990GHz, 5.150-5.250GHz, 5.725-5.850GHz) |
| Channel size | 5, 10, 20, 40, 80MHz |
| Modulation schemes | OFDM (256-QAM, 64-QAM, 16-QAM, QPSK, BPSK) |
| Data rates @ 80MHz | 866, 780, 650, 585, 520, 390, 260, 195, 130, 65Mbps |
| Duplexing scheme | TDD |
| Error correction | BCC, LDPC |
| Automatic Channel Selection | DFS Compatability |
| Automatic TPC | Supported |

| Modulation, Mbps | 866 | 780 | 650 | 585 | 520 | 390 | 260 | 195 | 130 | 65 |
|---|---|---|---|---|---|---|---|---|---|---|
| TX Power, dBm | 25 | 26 | 26 | 27 | 27 | 28 | 29 | 30 | 30 | 31 |
| Receive sensitivity, dBm | -71 | -73 | -77 | -79 | -80 | -84 | -87 | -92 | -94 | -97 |

## Antenna

| | |
|---|---|
| LigoPTP 5-23 RapidFire | Integrated directional dual-pol 23dBi panel |
| LigoPTP 5-N RapidFire | 2 N-type connectors |

## Wired

| | |
|---|---|
| First Interface | 10/100/1000 Base-T with PoE IN (RJ45) |
| Second Interface | 10/100/1000 Base-T with PoE OUT (RJ45) |

## Physical

**Dimensions without mount:**

| | |
|---|---|
| LigoPTP 5-23 RapidFire | Length 379mm (14.9''), width 387mm (15.2''), height 51mm (2'') |
| LigoPTP 5-N RapidFire | Length 399mm (15.7''), width 174mm (6.8''), height 47mm (1.8'') |
| Mount length till pole | 124mm (4.8'') |

**Weight including mount**:

| | |
|---|---|
| LigoPTP 5-23 RapidFire | 3.9kg (8.5lb) |
| LigoPTP 5-N RapidFire | 2.9kg (6.3lb) |

## Power

| | |
|---|---|
| Power input method, voltage | PoE 802.3at, isolated 42 - 57VDC |
| Power consumption (max) | 8.6W |
| Power output method, voltage | PoE 802.3af, 48VDC, 12.95W maximum |

PoE inserter and AC/DC adapter are included

## Environmental

| | |
|---|---|
| Operating temperature | –40°C (–40F) ~ +65°C (+149F) |
| Humidity | 0 ~ 95 % (non-condensing) |

COPYRIGHT ©2021 LIGOWAVE

## Software features

- Wizard for fast link setup
- Centralized control from master: A) Common wireless link parameters; B) Individual slave parameters
- Smart Auto-channel
- Robust data security
- QoS with hardware acceleration
- Spectrum analyzer
- Wireless signal and device state indication on RGB LEDs
- Dual firmware image

## Management

Dedicated 2.4GHz radio for management

| | |
|---|---|
| System monitoring | STP/SNMP (V1), GUI/HTTP(S), Shell/SSH and Infinity Controller |
| System configuration | GUI/HTTP(S) |

## Regulatory

| | |
|---|---|
| Certification | FCC/IC/CE |

## Antenna specifications

**V Pol**

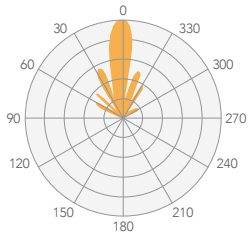


Azimuth

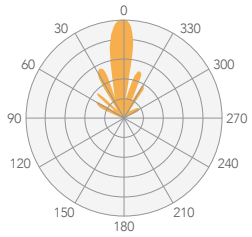


Elevation

**H Pol**

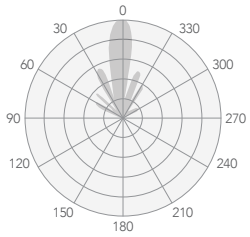


Azimuth

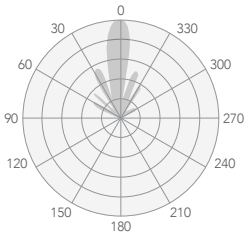


Elevation

## Internal antenna

| | |
|---|---|
| **Frequency range** | 4.9 - 5.9GHz |
| **Gain** | 23dBi |
| **Polarization** | Dual linear |
| **Cross-pol Isolation** | 27dBi |
| **VSWR** | 1.5:1 |
| **Azimuth beamwidth (H pol)** | 6° |
| **Azimuth beamwidth (V pol)** | 7° |
| **Elevation beamwidth** | 9° |



Copyright © 2021 LigoWave. All rights reserved. LigoWave, the LigoWave logo, are trademarks of LigoWave. All other company and product names may be trademarks of their respective companies. While every effort is made to ensure the information given is accurate, LigoWave does not accept liability for any errors or mistakes which may arise. Specifications and other information in this document may be subject to change without notice. To learn more about LigoWave products, visit www.ligowave.com.