NITTAN	EVOLUTION EV-H Analogue Addressable Heat Detector Class A1R & CS	TD-EV-H-12 February 2022 Page 1 of 1

TECHNICAL DATASHEET

Part Numbers and Product Order Codes:-

Part Number	EV-H
Description	Analogue Evolution Heat Sensor
Computer Reference Number	
Nittan Standard	F15-82200 (A1R) F15-82201 (CS)

Technical Specifications:-

Sensor Method	Thermistor
Sensor Element	Thermistor
Operating Voltage	20V d.c. to 35V d.c.
System Voltage	35V d.c.
Quiescent Current	200µA
Alarm Current	5mA
Current for external remote LED indicator	2mA
Operating Temperature	– 10°C to +55 (A1R) /+80°C (CS)
Storage Temperature	– 20°C to + 60°C
Min. and Max. Static Response Temperature	A1R: 54°C / 65°C, CS: 84°C / 100°C
Charging Time	4 minutes
Relative Humidity	≤ RH95% non-condensing.
I.P. Protection Rating	IP42
Addressing Method	Soft addressing, Non-Volatile EEPROM.
Material	ABS
Dimensions	∅104mm x 42.5mm (Sensor head) ∅104mm x 57.5mm (Sensor head and UB-6-EV)
Mass	98g (Sensor head) 163g (Sensor head and UB-6-EV base)
EMC Conformance	BSEN50130-4
CPR Certificate	2831-CPR-F0417 & F0420 / 2831-CPR-F2424 & F2425
UKCA Certificate	0832-UKCA-CPR-F0029/F0030 & F0035/F0036
Standards / Certification	EN54-5: 2017 + A1: 2018 / LPCB 041 & 1461
DoP Number	F0417 & F0420 / F2424 & F2425
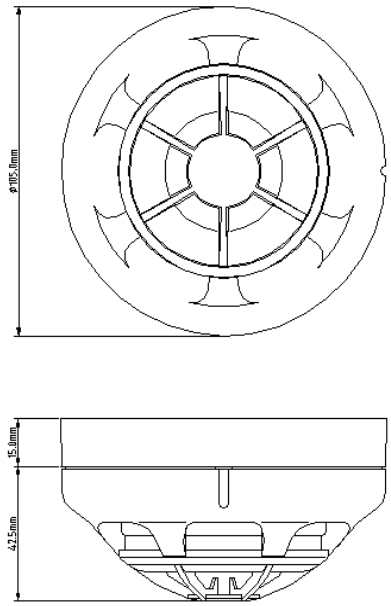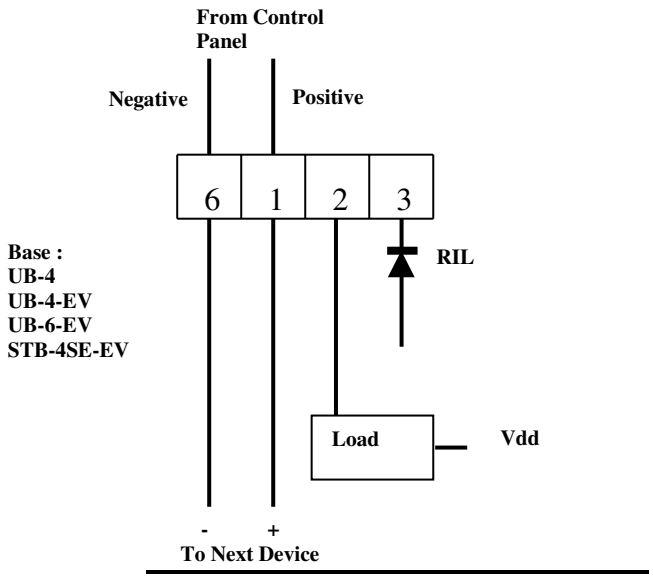
All wiring must conform to the current edition of IEE Wiring regulations and BS5839 Part 1
All loop Cable Screens shall be connected together, but must be Isolated from Ground. Cable Screens shall be connected to Earth Ground within the Control Panel ONLY.